Partdrawing for DLM481Z - Pagina 1

Model No.DLM481 480MM CORDLESS LAWN MOWER

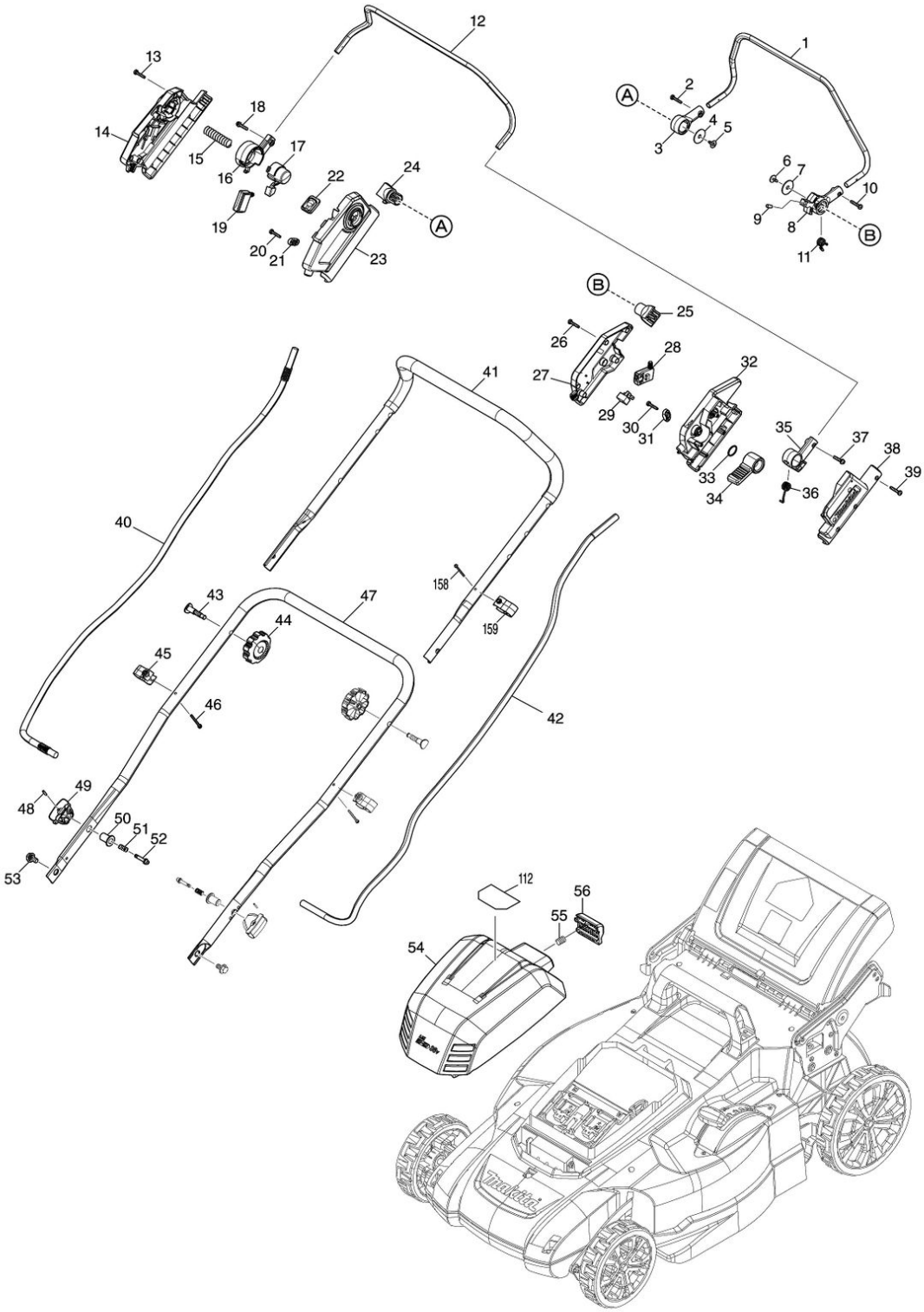

Partdrawing for DLM481Z - Pagina 2

Model No.DLM481 480MM CORDLESS LAWN MOWER

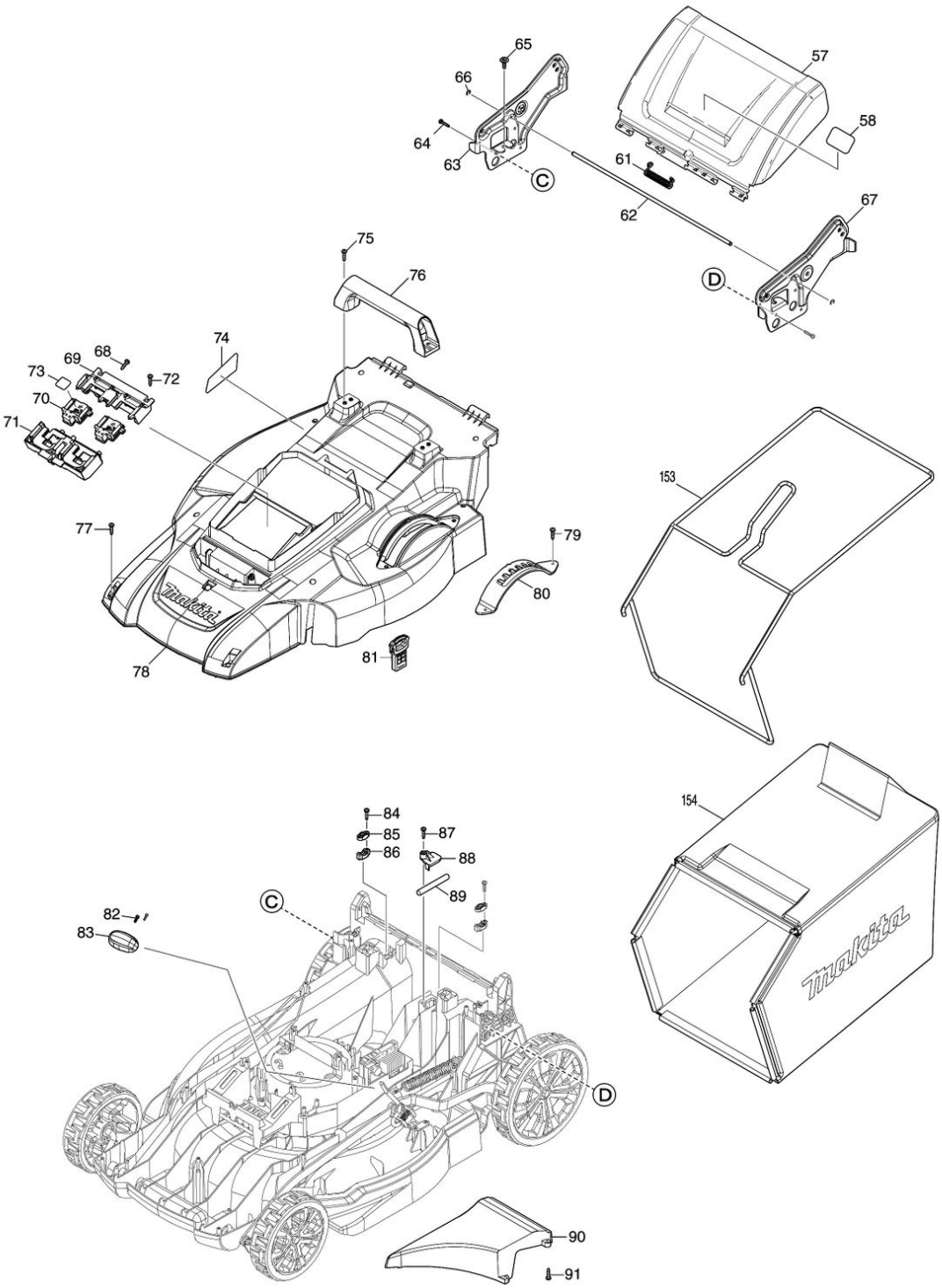

Model No.DLM481 480MM CORDLESS LAWN MOWER

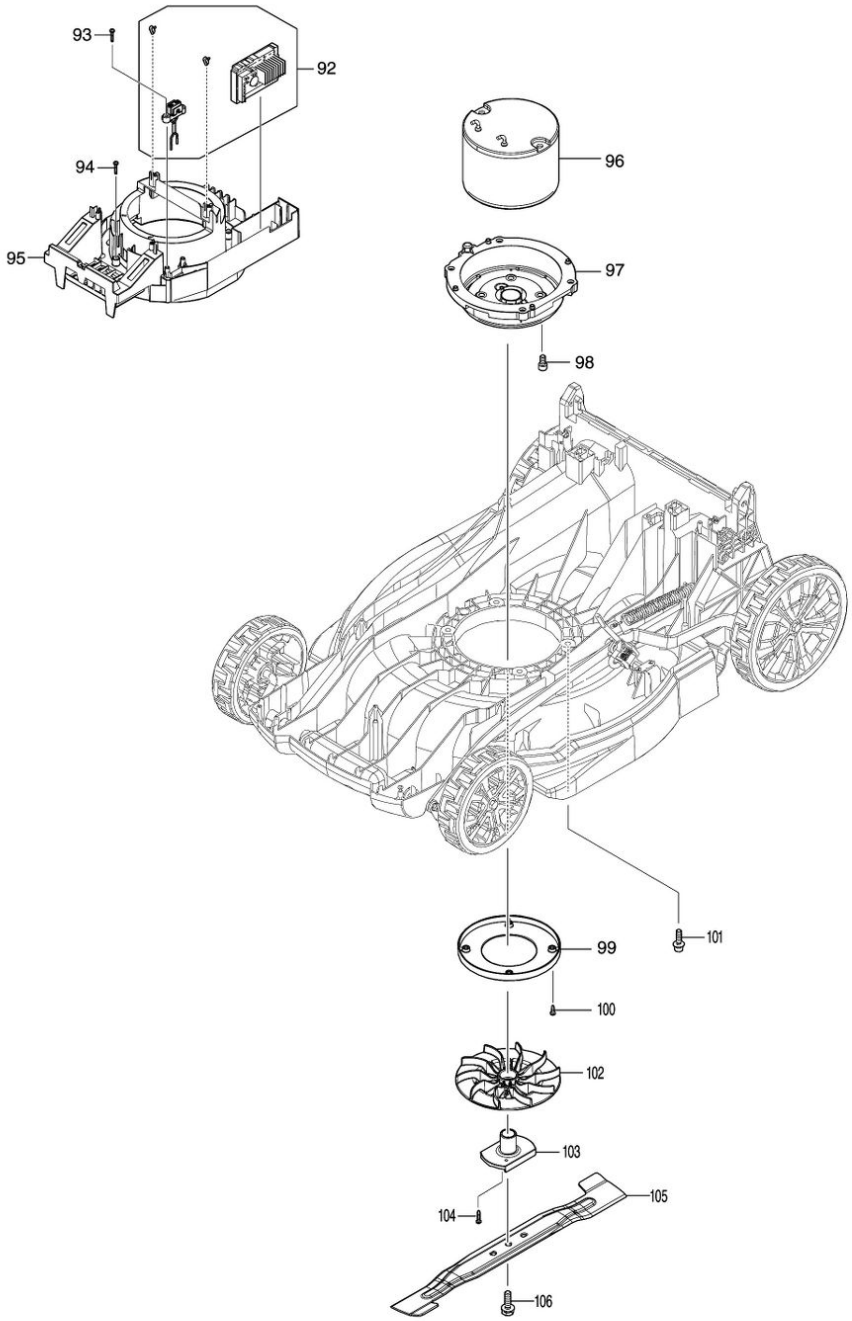
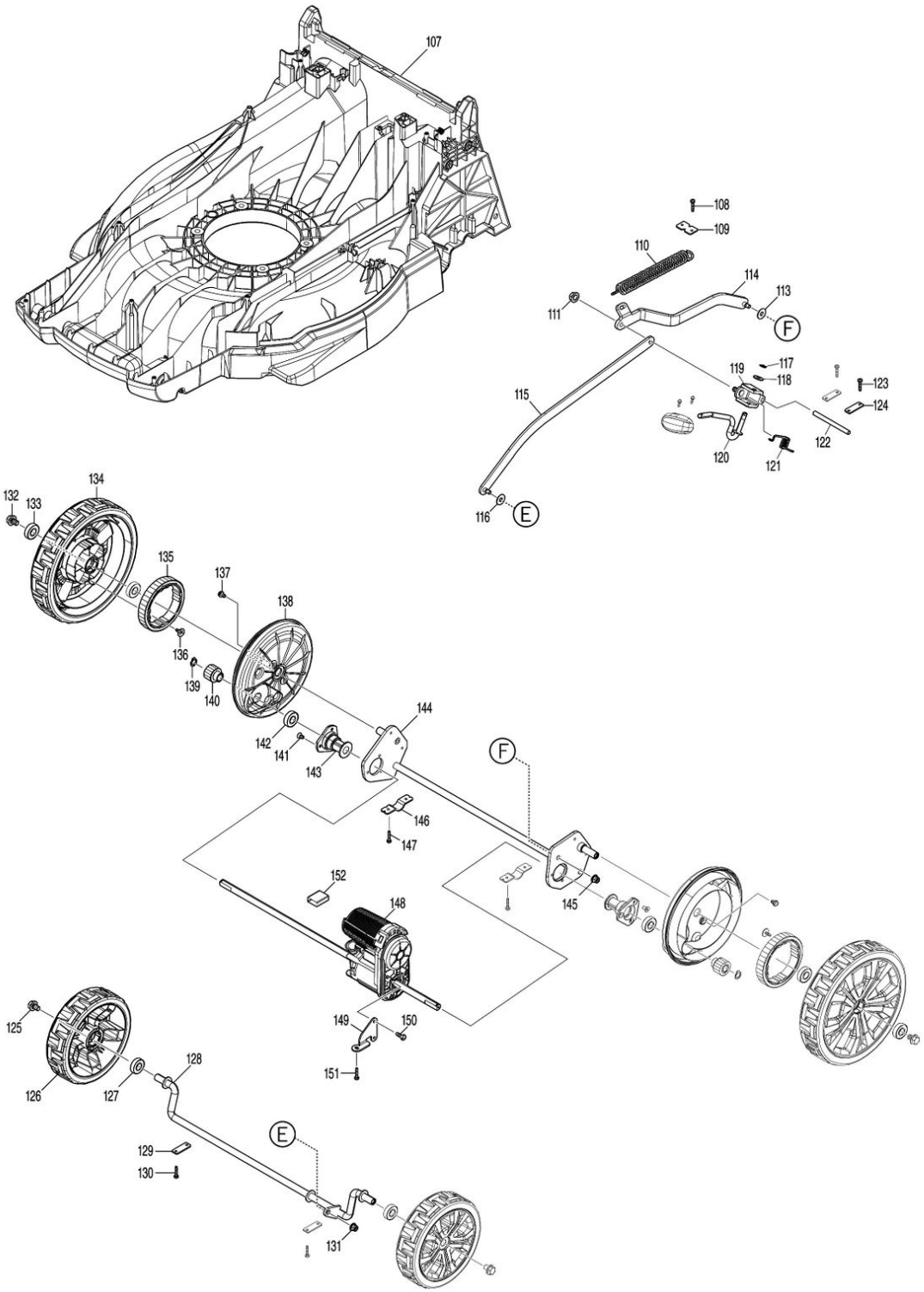
Model No.DLM481 480MM CORDLESS LAWN MOWER