Partdrawing for KP001GZ - Schaaf
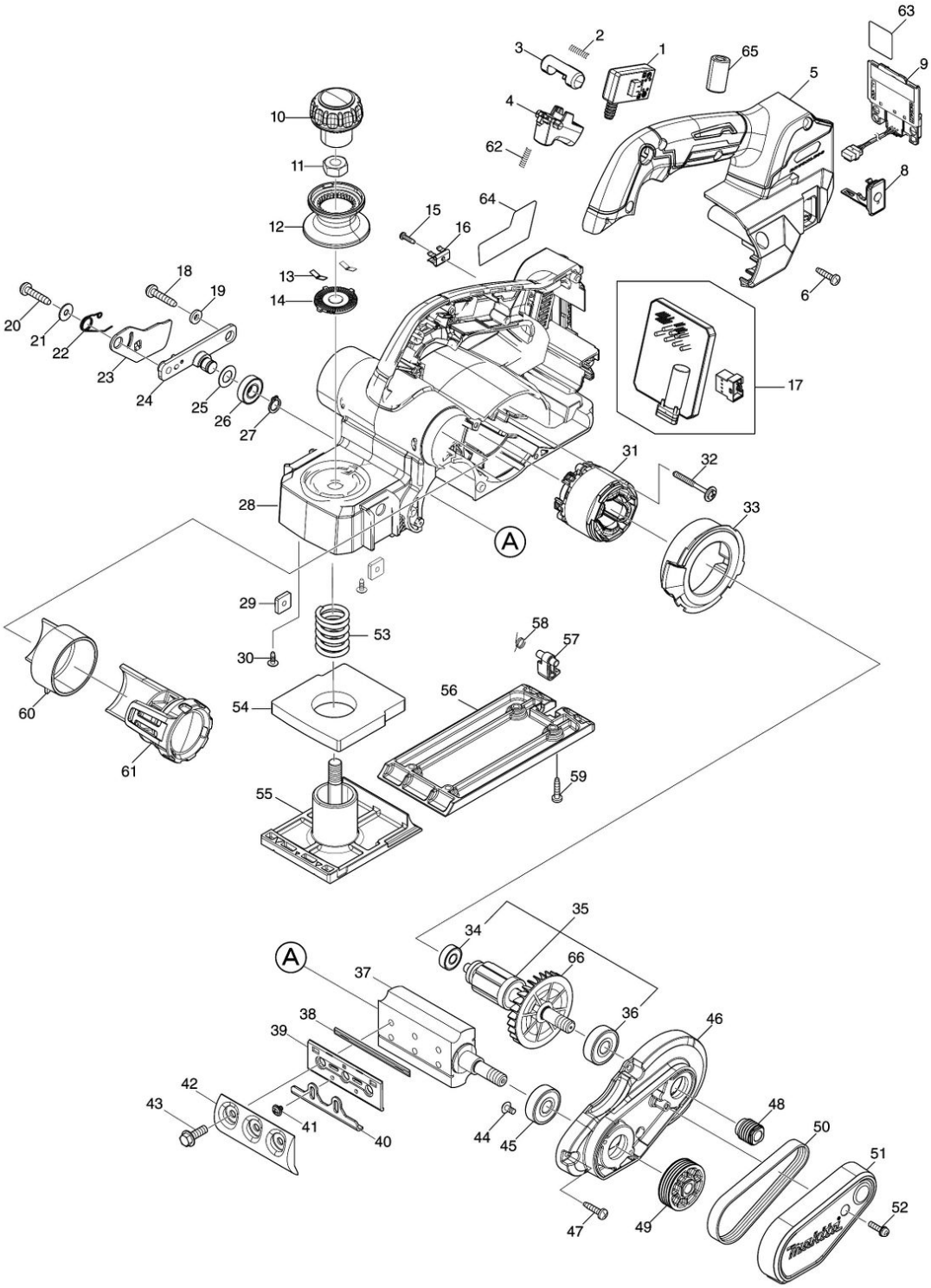
Model No.KP001G 82MM CORDLESS PLANER